Installation Instructions

Product Code: BC2 32 32 40 GR ST/EM
BC2 60 60 40 GR ST/EM
Product Description: Mensa LED Batten

3 YEAR

IP 20

RoHS compliant

Important Information

- It is recommended that luminaires are installed / maintained by a fully qualified electrician and wired in accordance to the latest IEC standards or national equivalent.
- Mains power must be switched off during any installation or maintenance.
- This product is guaranteed for a period of 3 years from date of purchase. The guarantee is invalid in the case of improper use, improper installation or tampering. Should the product fail during the guarantee period it will be replaced free of charge, subject to correct installation and return of the faulty unit. The manufacturer is not responsible for any costs associated with the replacement of this product.
- This product may contain substances that can be hazardous to the environment if not disposed of properly. Electrical and electronic equipment should never be disposed of with general household waste but must be separated for its correct treatment and recovery. Where possible recycle your packaging.
- This product contains a light source of energy efficiency class A.

1

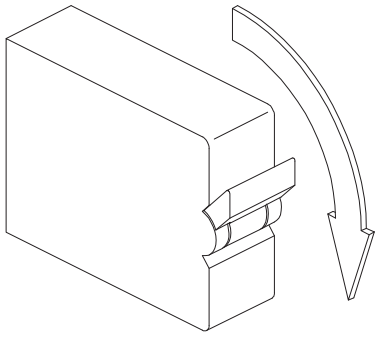

2

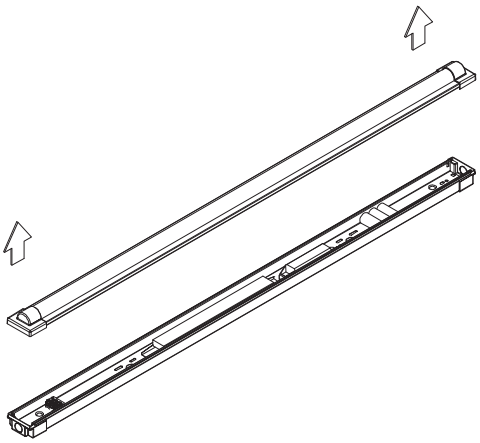

3

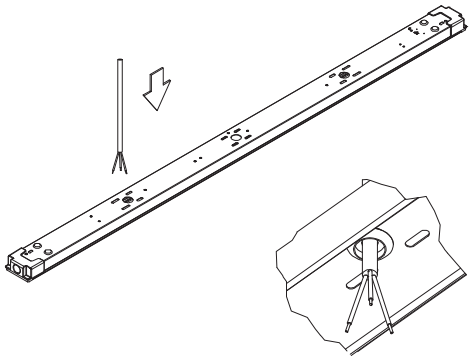

4

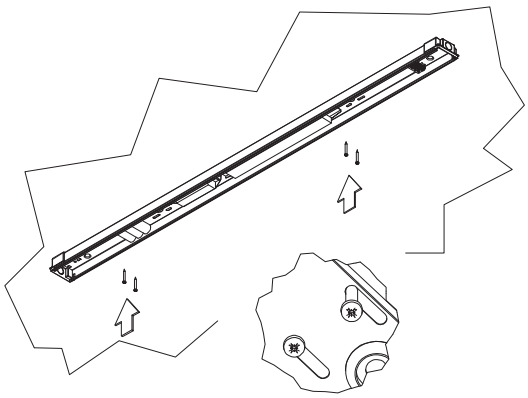

advance
LED lighting solutions

Advance LED Lighting Solutions Ltd
Unit 4 Stretton Business Park, Brunel Drive, Burton Upon Trent, DE13 0BY
Tel: 01332 865777

Installation Instructions

5

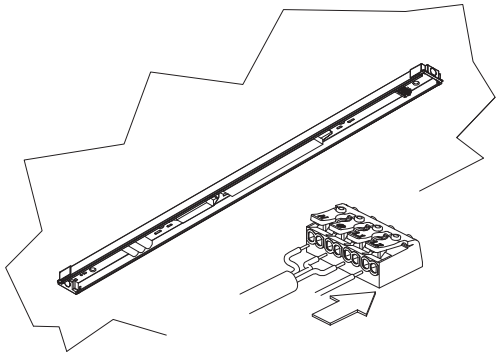

Emergency version

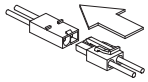

6

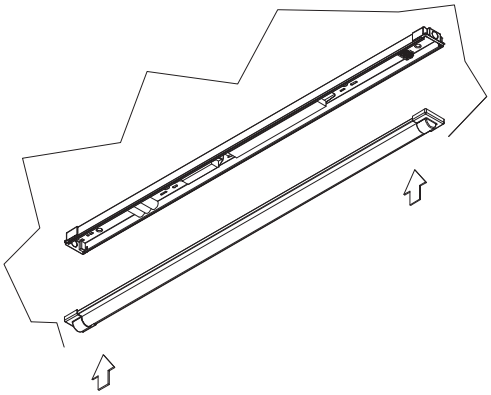

7

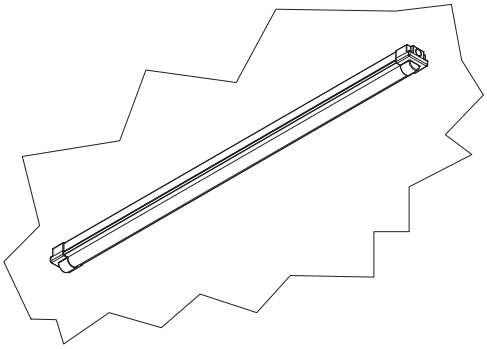

8

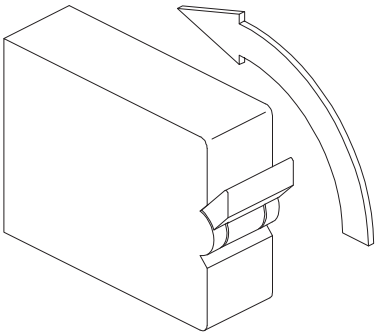

advance
LED lighting solutions

Advance LED Lighting Solutions Ltd
Unit 4 Stretton Business Park, Brunel Drive, Burton Upon Trent, DE13 0BY
Tel: 01332 865777